Published: 11-May-2011

Engine Cooling - TD4 2.2L Diesel -

Lubricants, Fluids, Sealers and Adhesives

Item	Specification
Anti-freeze	Texaco Extended Life Coolant (XLC) or any glycol based anti-freeze containing no methanol with only Organic Acid Technology (OAT) corrosion inhibitors
Anti-freeze concentration - Will provide frost protection to -40°C (-40°F)	50%
Specific gravity of coolant at 20°C (68°F), to protect against frost down to -40°C (-40°F)	1.068
Amount of anti-freeze to use for 50% concentration:	4.25 liters

Capacities

Item	Capacity (liters/pints/US quarts)
Cooling system capacity	8.5/15.0/9.0

General Specification

Item	Specification
Coolant pump	21.5 liter/min : 2.8 bar
Cooling fan	750W/600W
Cooling system type	Pressurised, thermostatically controlled with remote header tank
Expansion tank	Seeber with integrated level sensor
Pressure cap rating	145 kPa (21lb/in²)
Radiator	Valeo 28mm core with integrated drain cock and replaceable lower pin
Thermostat	Wax element
Starts to open	83°C (181°F)
Fully open	91°C (200°C)

Torque Specifications

Description	Nm	lb-ft
A/C condenser to radiator	10	7
Automatic transmission fluid cooler	6	6
Coolant manifold to thermostat housing pipe.	8	6
Coolant expansion tank bolt	10	7
Coolant pump bolts	17	13
Cylinder block sealing plug	42	31
Radiator bolts	6	5
Radiator drain plug	7	6
Thermostat housing bolts	8	6
Wiring harness support bracket.	8	6

mcx30.com

Published: 11-May-2011

Engine Cooling - TD4 2.2L Diesel - Engine Cooling

Description and Operation

COMPONENT LOCATION

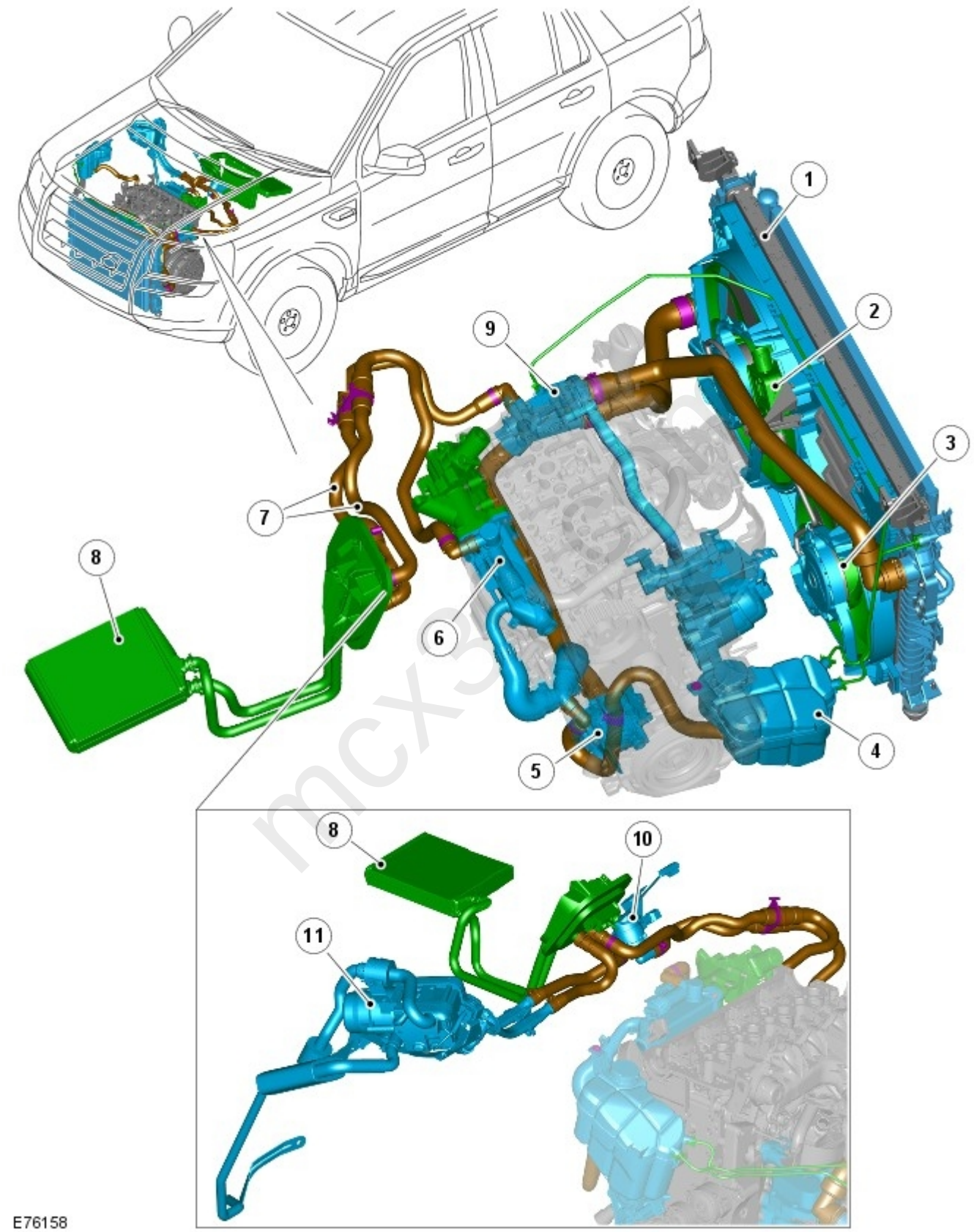

Item	Part Number	Description
1	-	Radiator
2	-	Twin electric fan control module
3	-	Twin electric fan assembly
4	-	Coolant reservoir with integral level sensor

5	-	Engine coolant pump
6	-	Exhaust Gas Recirculation (EGR) valve cooler
7	-	Heater connection hoses
8	-	Climate control system heater matrix
9	-	Thermal control module
10	-	Auxiliary coolant pump (cold climate vehicles)
11	-	Fuel Fired Booster Heater (FFBH) - (cold climate vehicle)

OVERVIEW

The main requirement of the TD4 diesel engine cooling system is to regulate the engines operating temperature, within an optimum range for all ambient and operating conditions. Additional functions of the cooling system are to provide heating to the climate control system, and cooling for the EGR system, engine lubrication system, and transmission lubrication system (automatic transmission models only).

The cooling system pipes and hoses feature quick release couplings to allow easy access to the system.

On cold climate market vehicles, the cooling system is modified to incorporate a FFBH and auxiliary cooling pump. The FFBH provides auxiliary heating to the vehicle cabin.
For additional information, refer to: Fuel Fired Booster Heater (412-02B Auxiliary Climate Control, Description and Operation).

COOLANT PUMP

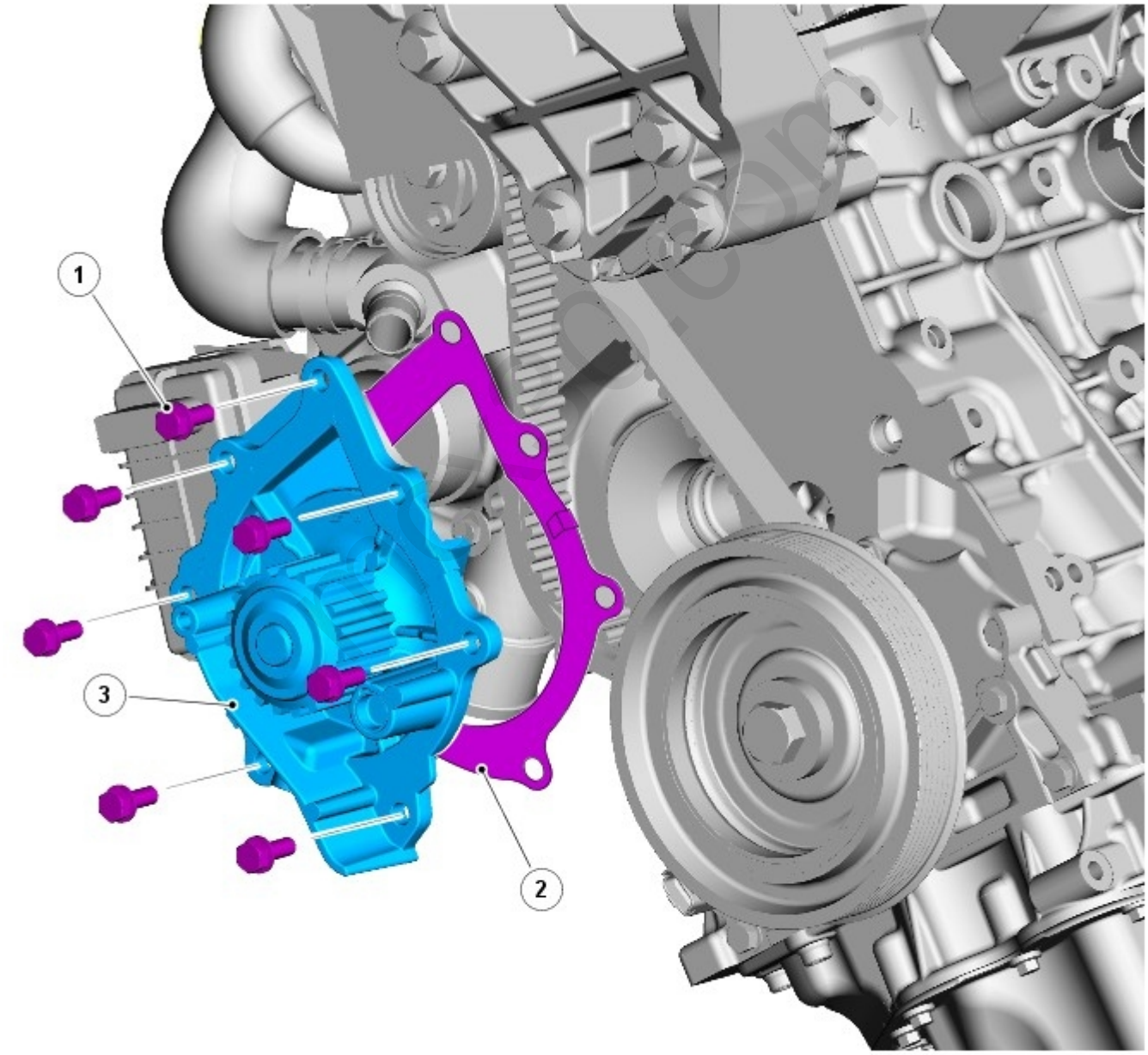

E82907

Item	Part Number	Description
1	-	Bolt (7 off)

2	-	Gasket
3	-	Coolant pump

The centrifugal type coolant pump is mounted at the front of the engine and secured with 7 bolts. The pump is directly driven by the toothed camshaft belt and circulates coolant through the cylinder block and cylinder head, cooling system and heater circuit.

The coolant pump is able to deliver coolant at a rate of 215 liters/min (57 US gallons/min) at 2.8 bar (41 psi), creating a maximum external system pressure of 2.0 bar (30 psi).

A large diameter coolant rail located on the Right-Hand (RH) side of the engine connects the rear of the coolant pump housing to the thermal control module outlet. A connection on the coolant rail at the coolant pump housing end provides the coolant return from the EGR cooler.

THERMAL CONTROL MODULE

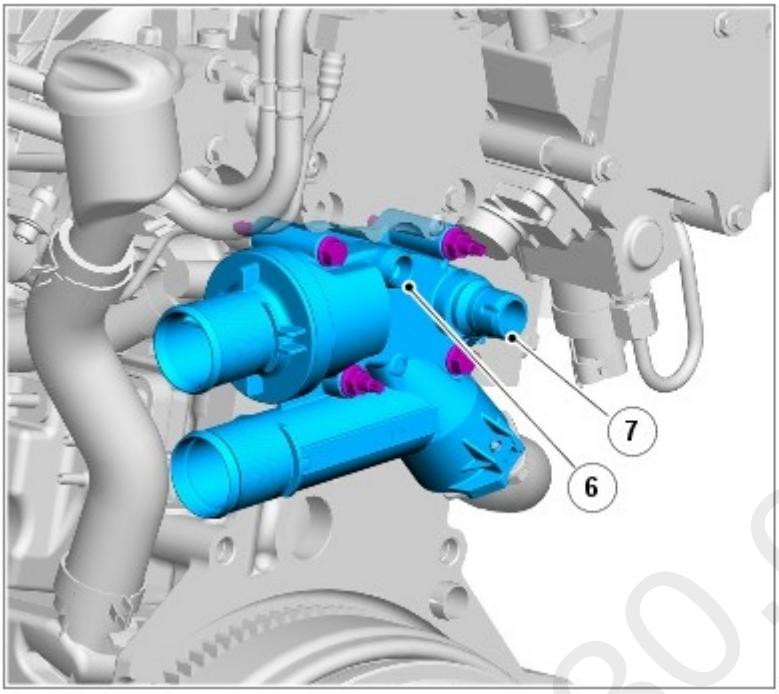

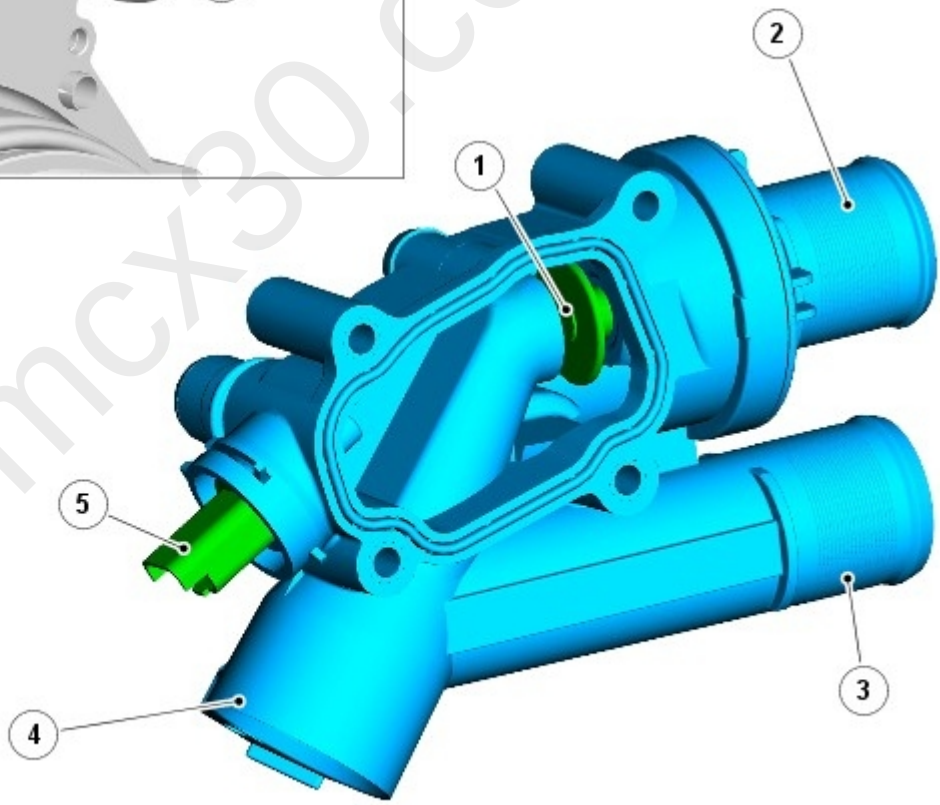

E82908

Item	Part Number	Description
1	-	Thermostat and by-pass valve
2	-	Radiator top hose connection
3	-	Radiator bottom hose connection
4	-	Coolant rail connection to coolant pump housing
5	-	Engine Coolant Temperature (ECT) sensor
6	-	Degas line connection
7	-	Supply to heater inlet

The thermal control module is mounted to the rear of the cylinder head with 2 studs and nuts, and 2 bolts and is sealed with an O-ring. The module comprises a wax type thermostat with by-pass valve, and an ECT sensor. Two connections on the Left-Hand (LH) side of the module provide the connection for the radiator top and bottom hoses.

mcx30.com

The wax-type thermostat locates in the top hose connection to the radiator. A large diameter connection at the RH lower side connects the module to the coolant rail. Two small diameter outlets on the front of the module provide the connection for a supply hose to the heater matrix, and a degas line to the coolant reservoir.

The thermal control module promotes rapid warming of the engine to normal operating temperature by closing the return coolant connection from the engine to the radiator. During the engine warming period, the thermostat is closed and the by-pass valve is open. The by-pass port allows coolant to circulate through the closed engine circuit via the coolant pump, climate control heater circuit and EGR cooler.

As the coolant temperature increases, the thermostat is opened and the by-pass valve is closed. The hot coolant returning from the engine is allowed to flow from the thermal control module to the radiator, through the open thermostat and top hose connection. Return coolant from the radiator flows through the bottom hose connection to the coolant pump, via the coolant rail.

The thermostat commences opening at 83°C (181°F), and is fully open at 91°C (196°F).

The ECT sensor is located in the thermal control module and secured in the housing with a clip. The ECT sensor provides an engine coolant temperature signal to the Engine Control Module (ECM). The signal is used by the ECM to control the operation of the 2 cooling fans.
For additional information, refer to: Electronic Engine Controls - 2.2L Diesel (303-14 Electronic Engine Controls - 2.2L Diesel, Description and Operation).

The ECM also communicates the ECT signal on the high speed Controller Area Network (CAN) bus to the Central Junction Box (CJB). The CJB transmits the ECT signal via the medium speed CAN bus to the instrument cluster, for display on the coolant temperature gage.
For additional information, refer to: Instrument Cluster (413-01 Instrument Cluster, Description and Operation).

RADIATOR

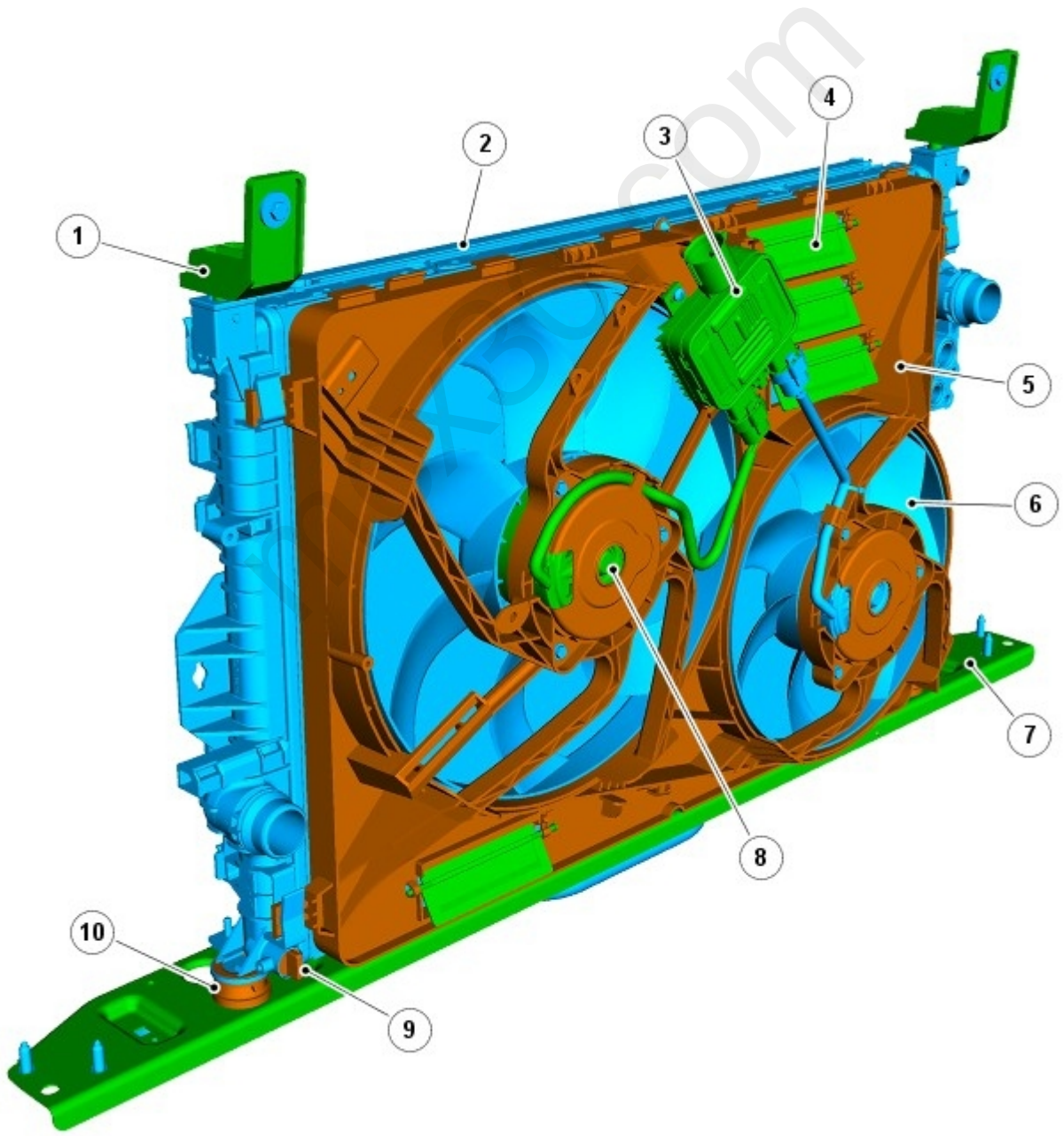

E82909

Item	Part Number	Description
1	-	Radiator upper support bracket
2	-	Radiator
3	-	Twin fan control module
4	-	High speed ram flaps (4 off)
5	-	Fan shroud
6	-	Electric fan
7	-	Radiator lower support bracket
8	-	Fan motor
9	-	Coolant drain point
10	-	Radiator lower support bush

The radiator is a right to left cross-flow type comprising an aluminum matrix. The bottom of the radiator is located in rubber bushes, and supported by a steel bracket screwed to the body longitudinal end plates. The top of the radiator is located in rubber bushes and is secured by brackets attached to the hood locking platform.

A hose connection on each side of the radiator provides the attachment for the top and bottom hose. A small diameter port in the top RH side provides a degas line connection to the coolant reservoir. A coolant drain point is provided on the bottom LH side of the radiator.

The rear of the radiator is covered with a fan shroud that also provides the mounting location for the twin fans and fan control module. The 4 high speed ram flaps located on the shroud are provided to assist the flow of cooling air into the engine compartment, regardless of fan operation. The ram flaps are operated by the ram air effect as air enters through the front grille. The ram flaps open when air speed through the radiator is sufficient to overcome the flap closing force.

On vehicles installed with AWF21 automatic transmission, the transmission fluid is cooled by an oil cooler mounted to the rear LH side of the radiator. The cooler is connected into the LH top third of the radiator (cold side) and causes a restriction to the flow of coolant across this portion of the radiator. As the coolant flow is restricted, the coolant travels at a slower rate creating a low temperature zone. This cools the coolant in that portion of the radiator more than the lower portion to provide increased cooling of the transmission oil.
For additional information, refer to: Transmission Cooling (307-02 Transmission/Transaxle Cooling, Description and Operation).

TWIN ELECTRIC FAN ASSEMBLY

A twin electric fan assembly is mounted to the fan shroud and attached to the rear of the radiator. The fans draw air through the radiator to regulate the coolant temperature, and provide cooling air through the engine compartment.

The fans are operated by the fan control module that receives a 0 to 100% Pulse Width Modulation (PWM) frequency signal from the ECM. The ECM varies the PWM signal based on inputs from various sensors. The fan control module uses the PWM signal to determine the required output voltage to the 2 cooling fan motors.
For additional information, refer to: Electronic Engine Controls - 2.2L Diesel (303-14 Electronic Engine Controls - 2.2L Diesel, Description and Operation).

Following certain engine operating conditions and with the ignition switched off, the fans will continue to operate under the control of the ECM to maintain engine cooling.

ENGINE OIL COOLER

mcx30.com

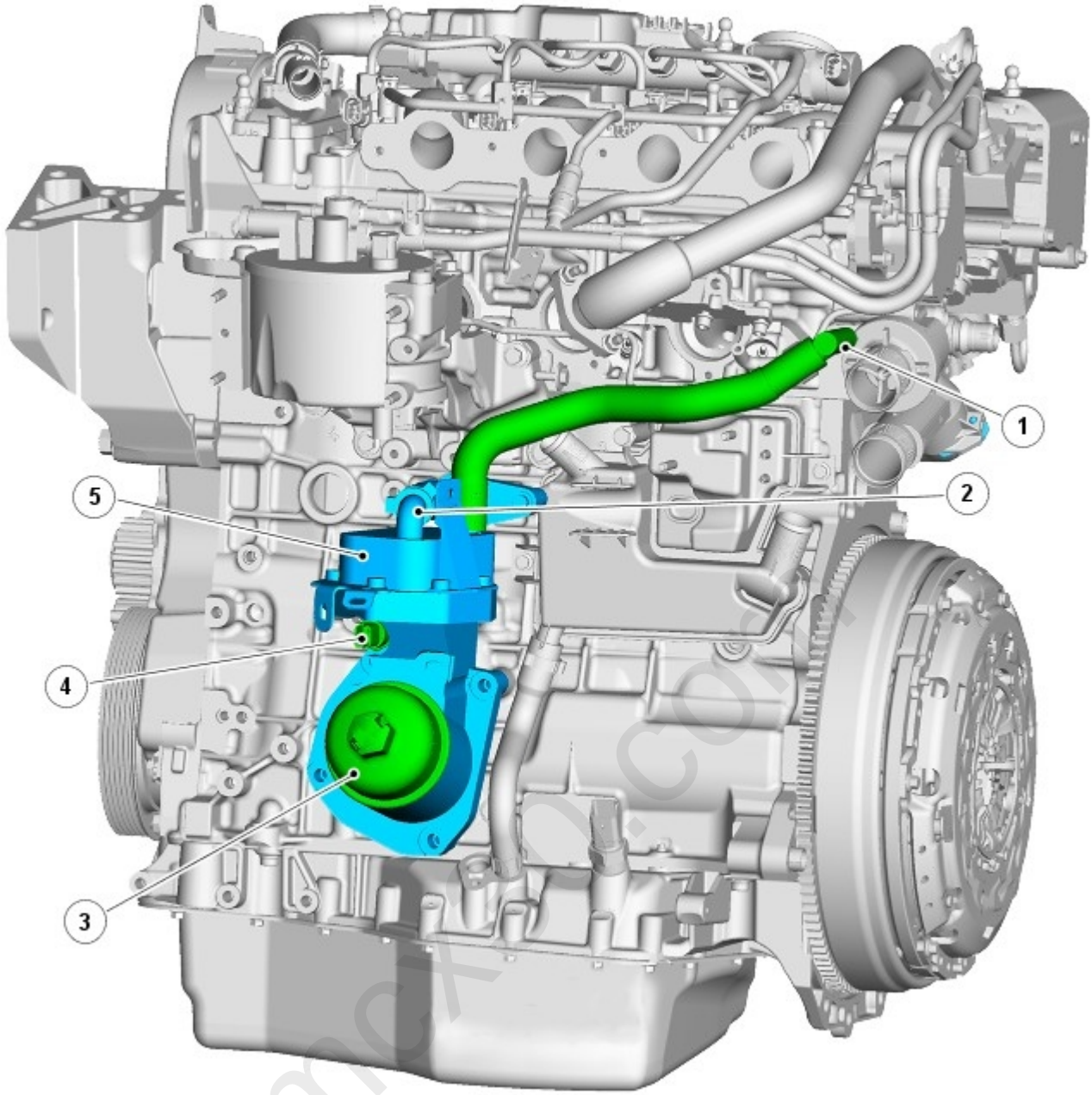

E82910

Item	Part Number	Description
1	-	Coolant return from oil cooler
2	-	Coolant supply from cylinder block
3	-	Oil filter housing
4	-	Oil pressure switch
5	-	Oil cooler

The engine oil is cooled by an integrated oil filter and cooler assembly, located at the LH side of the engine. A short hose connects the oil cooler to the cylinder block and provides the coolant supply to the oil cooler. A hose connected between the oil cooler and front of the cylinder head provides the coolant return to the thermal control module.

COOLANT RESERVOIR

The coolant reservoir is incorporated into the system to provide sufficient air volume for coolant expansion, and to allow entrained air and gas to escape from the coolant. Degas lines connect the reservoir to the thermal control module and radiator.

The coolant level is monitored by an integral float type sensor located within the coolant reservoir. The coolant level sensor is connected to the CJB. On vehicles installed with a low-line instrument cluster, a low engine coolant level warning indicator lamp is illuminated if the coolant level falls below the level of the sensor. On vehicles installed with a high-line instrument cluster, a low coolant level message is displayed in the message center. For additional information, refer to:

Instrument Cluster (413-01 Instrument Cluster, Description and Operation),
Information and Message Center (413-08 Information and Message Center, Description and Operation).

The reservoir is sealed with a screw cap, and provides the means to replenish the system during service intervals. The reservoir cap incorporates a pressure relief valve that protects the cooling system from over pressure.

CLIMATE CONTROL HEATER MATRIX

The heater matrix is installed in the climate control assembly, located on the vehicle center line between the instrument panel and the engine bulkhead. Two pipes pass through the bulkhead into the engine compartment and connect to a supply and a return cooling system heater hose. The coolant supply hose is connected to an outlet on the thermal control module. The coolant return hose is connected to the EGR cooler.

The matrix is constructed from aluminum with two end tanks interconnected with tubes. Aluminum fins are located between the tubes and transfer heat to the passing air. Coolant is supplied to the heater matrix at all times when the engine is running.
For additional information, refer to: Heating and Ventilation (412-01 Climate Control, Description and Operation).

ENGINE COOLANT

The long-life engine coolant is silicate free and is not to be mixed with conventional engine coolant.

The cooling system contains approximately 8 liters (8.5 US quarts) of a 50/50 water and long life coolant concentration.

PRINCIPLES OF OPERATION

Cooling System Flow at Normal Operating Temperature

mcx30.com

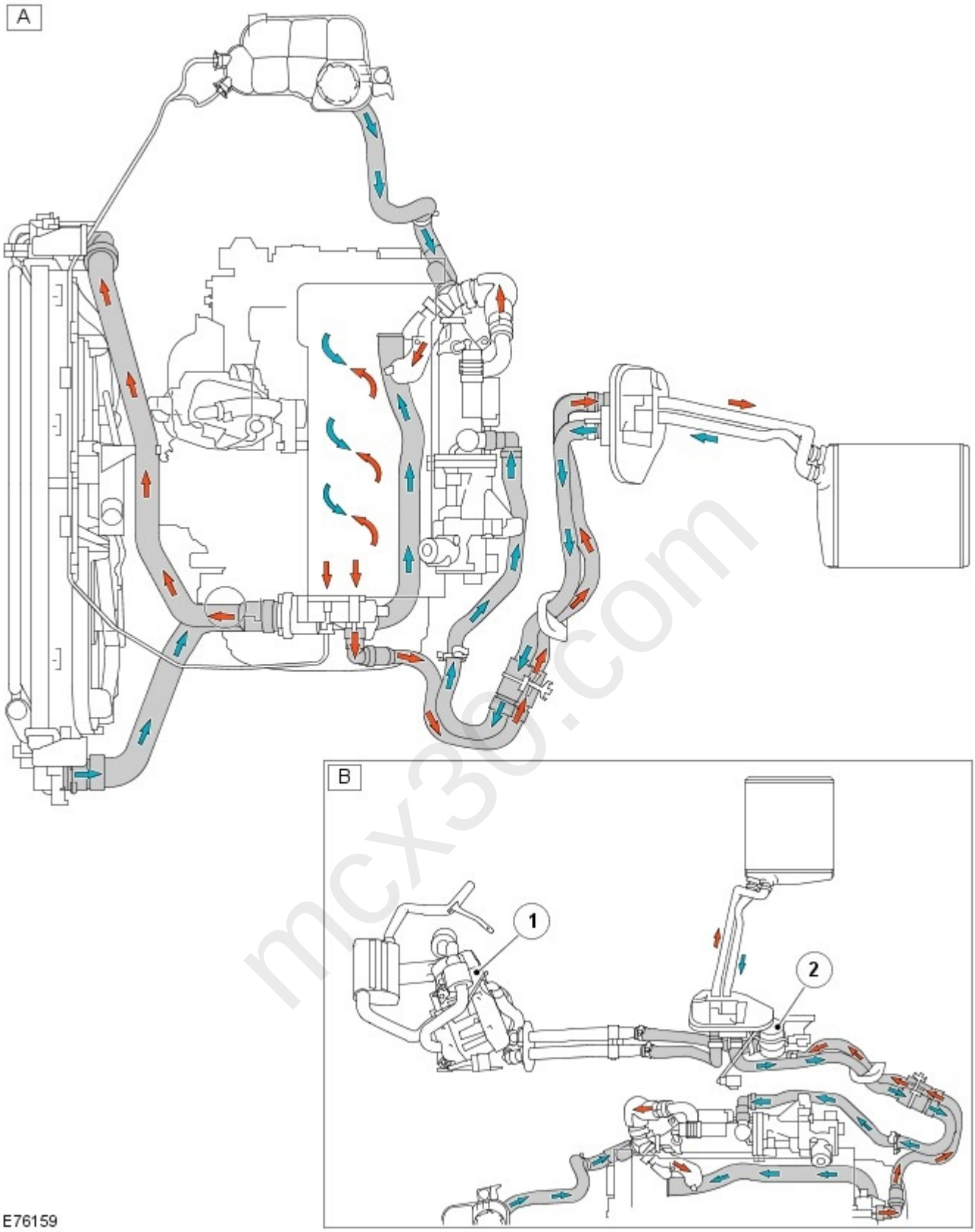

Item	Part Number	Description
A	-	Cooling system (temperate climate vehicles)
B	-	Additional cooling system components (cold climate vehicles)
1	-	FFBH
2	-	Auxiliary coolant pump

Engine Cold

During engine starting the coolant pump is driven by the camshaft drive belt and circulates coolant through the engine cylinder block, engine oil cooler and cylinder head. Coolant also flows through the climate control heater circuit and the EGR cooler. The thermostat is in the closed position and prevents the return of coolant from the engine to the radiator.

With the thermostat closed, the by-pass valve is open and directs the return coolant through the thermal control module and coolant rail to the coolant pump housing. The coolant continues to circulate and is progressively heated by the engine.

mcx30.com

Entrained gases in the cooling system escape through the thermal control module degas line to the coolant reservoir.

The increasing coolant temperature is felt at the thermostat, and is registered on the instrument cluster coolant temperature gage via the ECM and ECT sensor signal.
For additional information, refer to: Instrument Cluster (413-01 Instrument Cluster, Description and Operation).

Engine Normal Operating Temperature

With the coolant temperature increasing, at 83°C (181°F) the thermostat reacts and commences opening. The by-pass valve is progressively closed. Hot coolant returning from the engine to the thermal control module is now allowed to pass through the top hose connection to the radiator. The flow of hot coolant to the radiator now forces cold coolant within the radiator and bottom hose to flow to the thermal control module.

During the thermostat opening period there is an initial temperature differential of the coolant at both sides of the thermostat. The thermostat reacts to the temperature differential and partially closes, while the by-pass valve opens further. The thermostat and by-pass valve continue to oscillate while the coolant temperature increases.

At a coolant temperature of 91°C (196°F) the thermostat is fully opened and the by-pass valve is fully closed. The return coolant from the engine is now fully circulated through the radiator and bottom hose. Coolant flows through the radiator from the RH tank to the LH tank, and is cooled by air passing through the matrix. Entrained gases in the radiator escape through the connected degas line to the coolant reservoir.

The increased coolant volume created by heat expansion causes the coolant level to rise through the connecting reservoir hose, and into the reservoir.

The temperature of the cooling system is constantly monitored by the ECM via the ECT sensor signal. The ECM uses the ECT signal to control operation of the cooling fans, and to adjust engine fueling. The ECM also operates the fans in response to inputs from the automatic transmission oil temperature sensor, Air Conditioning (A/C) system control switch, and the A/C pressure sensor. For additional information, refer to: Electronic Engine Controls - 2.2L Diesel (303-14 Electronic Engine Controls - 2.2L Diesel, Description and Operation).
For additional information, refer to: Air Conditioning (412-01 Climate Control, Description and Operation).

The cooling fan speed is also influenced by vehicle road speed. The ECM adjusts the speed of the cooling fans to compensate for the ram air effect, using the CAN bus road speed signal received from the Anti-Lock Brake System (ABS) module.

When the engine is shut down, the coolant temperature and volume decrease. The thermostat starts to close as the coolant temperature decreases to 89°C (192°F), and is fully closed at 81°C (178°F). The coolant level within the reservoir decreases as coolant is drawn from the reservoir to replenish the system.

Following engine shut down when the coolant pump is stationary, the ECM may continue to operate the cooling fans for a pre-determined period to maintain engine cooling.

mcx30.com

Published: 11-May-2011

Engine Cooling - TD4 2.2L Diesel - Engine Cooling

Diagnosis and Testing

Principles of Operation

For a detailed description of the cooling system, refer to the relevant Description and Operation section in the workshop manual.
REFER to: Engine Cooling (303-03B Engine Cooling - TD4 2.2L Diesel, Description and Operation).

Inspection and Verification

CAUTION: Diagnosis by substitution from a donor vehicle is **NOT** acceptable. Substitution of control modules does not guarantee confirmation of a fault, and may also cause additional faults in the vehicle being tested and/or the donor vehicle.

1. **1.** Verify the customer concern.
2. **2.** Visually inspect for obvious signs of mechanical or electrical damage.

Visual Inspection

Mechanical	Electrical
• Coolant leaks • Coolant expansion tank • Electric fan • Radiator	• Fuse • Wiring harness • Loose or corroded connector(s) • Engine Coolant Temperature (ECT) sensor

3. **3.** If an obvious cause for an observed or reported concern is found, correct the cause (if possible) before proceeding to the next step
4. **4.** If the cause is not visually evident, verify the symptom and refer to the Symptom Chart, alternatively, check for Diagnostic Trouble Codes (DTCs) and refer to the DTC Index.

Symptom Chart

Symptom	Possible Cause	Action
Coolant loss	• Hoses • Hose connections • Radiator • Coolant pump • Heater core • Gaskets • Engine casting cracks • Engine block core plugs	• GO to Pinpoint Test A.
Engine overheating	• Engine coolant (level/condition) • Thermostat • Fan motor • Fan motor fuses and/or circuits • ECT sensor • Engine control module (ECM) • Fan speed module	• GO to Pinpoint Test B.
Engine not reaching normal operating temperature	• Thermostat • Electric fan • Fan speed module	• GO to Pinpoint Test C.

DTC Index

• NOTE: If the control module or a component is suspect and the vehicle remains under manufacturer warranty, refer to the Warranty Policy and Procedures manual (section B1.2), or determine if any prior approval programme is in operation, prior to the installation of a new module/component.

• NOTE: Generic scan tools may not read the codes listed, or may read only five digit codes. Match the five digits from the scan tool to the first five digits of the seven digit code listed to identify the fault (the last two digits give extra information read by the manufacturer approved diagnostic system).

• NOTE: When performing voltage or resistance tests, always use a digital multimeter (DMM) accurate to three decimal places, and with a current calibration certificate. When testing resistance, always take the resistance of the DMM leads into account.

• NOTE: Check and rectify basic faults before beginning diagnostic routines involving pinpoint tests.

• NOTE: If DTCs are recorded and, after performing the pinpoint tests, a fault is not present, an intermittent concern may be the cause. Always check for loose connections and corroded terminals.

DTC	Description	Possible Cause	Action
P011600	Engine Coolant Temperature Sensor 1 Circuit	• Minimum temperature or increase not achieved within	Check integrity of cooling system. REFER to: Engine Cooling (303-03B

mcx30.com

DTC	Description	Possible Cause	Action
	Range/Performance	time limit	Engine Cooling - TD4 2.2L Diesel, Diagnosis and Testing).
P011700	Engine Coolant Temperature Sensor 1 Circuit Low	• Engine coolant temperature sensor circuit - short to ground, open circuit	Carry out the pinpoint tests associated with this DTC using the manufacturer approved diagnostic system
P011800	Engine Coolant Temperature Sensor 1 Circuit High	• Engine coolant temperature sensor circuit - short to power	Carry out the pinpoint tests associated with this DTC using the manufacturer approved diagnostic system
P048000	Fan 1 Control Circuit	• Fan control output 1 circuit - no load	Carry out the pinpoint tests associated with this DTC using the manufacturer approved diagnostic system
P04804B	Fan 1 Control Circuit	• Fan control output 1 circuit - over temperature	Carry out the pinpoint tests associated with this DTC using the manufacturer approved diagnostic system
P048100	Fan 2 Control Circuit	• Fan PWM power stage output 2 no load	Refer to electrical circuit diagrams and check cooling fan 2 control circuit for open circuit
P04814B	Fan 2 Control Circuit	• Fan PWM power stage output 2 excess temperature	Refer to electrical circuit diagrams and check cooling fan 2 control circuit for high resistance
P048300	Fan Performance	• Fan has stalled	Check and remove obstruction from cooling fan. Check for seizure of cooling fan
P069111	Fan 1 Control Circuit Low	• Fan control output 1 circuit - short to ground	Carry out the pinpoint tests associated with this DTC using the manufacturer approved diagnostic system
P069212	Fan 1 Control Circuit High	• Fan control output 1 circuit - short to power	Carry out the pinpoint tests associated with this DTC using the manufacturer approved diagnostic system
P069311	Fan 2 Control Circuit Low	• Cooling fan control circuit - short to ground	Refer to electrical circuit diagrams and check cooling fan control circuit for short to ground
P069412	Fan 2 Control Circuit High	• Cooling fan control circuit - short to power	Refer to electrical circuit diagrams and check cooling fan control circuit for short to power

Pinpoint Tests

PINPOINT TEST A : LOSS OF COOLANT	
TEST CONDITIONS	**DETAILS/RESULTS/ACTIONS**
A1: VISUAL INSPECTION	
	1 Visually inspect for loss of coolant.
	2 Carry out a system pressure test. See component tests in this section.
	Is the engine cooling system leaking? **Yes** Rectify the leak as indicated by the test result. Top-up and fill the cooling system to the correct level with the correct specification fluid as necessary. REFER to: Specifications (303-03A Engine Cooling - I6 3.2L Petrol, Specifications) / Cooling System Draining, Filling and Bleeding (303-03A Engine Cooling - I6 3.2L Petrol, General Procedures). TEST the system for correct operation. **No** Verify the customer complaint.

PINPOINT TEST B : THE ENGINE OVERHEATS	
TEST CONDITIONS	**DETAILS/RESULTS/ACTIONS**
B1: CHECK COOLANT	
WARNING: The cooling system is pressurized! Ensure the reservoir cap is never released until the system has cooled. Failure to follow these instructions may result in personal injury.	
	1 Check the coolant level and condition.
	Does the system contain sufficient coolant of the correct specification? **Yes** GO to B2. **No** Top-up and fill the cooling system to the correct level with the correct specification fluid as necessary. REFER to: Specifications (303-03A Engine Cooling - I6 3.2L Petrol, Specifications) / Cooling System Draining, Filling and Bleeding (303-03A Engine Cooling - I6 3.2L Petrol, General Procedures). Check for coolant loss. GO to Pinpoint Test A.
B2: CHECK COOLANT EXPANSION TANK PRESSURE CAP	
	1 Check the coolant expansion tank pressure cap for damage/correct operation. REFER to the coolant expansion tank pressure cap pressure test in this section.

	Is the coolant expansion tank pressure cap operating correctly? **Yes** GO to B3. **No** INSTALL a new coolant expansion tank pressure cap. TEST the system for correct operation.
B3: CHECK THERMOSTAT	
	1 Check the thermostat for correct operation. REFER to the thermostat component test in this section.
	Is the thermostat operating correctly? **Yes** Check for correct operation of cooling fans, circuits, sensors, modules, etc. REFER to: Electronic Engine Controls (303-14B Electronic Engine Controls - TD4 2.2L Diesel, Diagnosis and Testing). **No** INSTALL a new thermostat. REFER to: Thermostat (303-03B Engine Cooling - TD4 2.2L Diesel, Removal and Installation). TEST the system for correct operation.

PINPOINT TEST C : THE ENGINE DOES NOT REACH NORMAL OPERATING TEMPERATURE	
TEST CONDITIONS	**DETAILS/RESULTS/ACTIONS**
C1: CHECK THERMOSTAT	
	1 Check the thermostat for correct operation. REFER to the thermostat component test in this section.
	Is the thermostat operating correctly? **Yes** Check for correct operation of cooling fans, circuits, sensors, modules, etc. REFER to: Electronic Engine Controls (303-14B Electronic Engine Controls - TD4 2.2L Diesel, Diagnosis and Testing). **No** INSTALL a new thermostat. REFER to: Thermostat (303-03B Engine Cooling - TD4 2.2L Diesel, Removal and Installation). TEST the system for correct operation.

Component Tests

Cooling System Pressure Test

WARNING: Never, under any circumstances, remove the coolant expansion tank pressure cap while the engine is operating. To avoid having scalding hot water or steam blow out of the cooling system, use extreme care when removing the coolant expansion tank pressure cap from a hot cooling system. Wait until the engine has cooled, then wrap a thick cloth around the coolant expansion tank pressure cap and turn it slowly until the pressure begins to release, step back while the pressure is released from the system. When certain all the pressure has been released (still with a cloth) turn and remove the coolant expansion tank pressure cap. Failure to follow these instructions may result in damage to the cooling system, engine and/or cause personal injury.

1. **1.** Switch the engine off.
2. **2.** Open the hood and install protective fender covers.
3. **3.** Carefully remove the coolant expansion tank pressure cap from the coolant expansion tank to relieve pressure in the cooling system. Add coolant to coolant expansion tank as necessary.
4. **4.** Install the pressure tester equipment to the cooling system following manufacturers instructions. Reinstall the coolant expansion tank pressure cap (if pressure test equipment is not installed to the coolant expansion tank).
5. **5.** Pressurize the cooling system to the coolant expansion tank pressure cap lower limit.
6. **6.** Observe the gauge reading for approximately two minutes. Pressure should not drop during this time.
   - If system holds pressure, continue from step 7.
   - If the pressure drops, check the complete cooling system for leaks. Also refer to engine system checks if a leak cannot be located in the cooling system. Correct any leaks found and recheck the system.
7. **7.** Release the system pressure and remove the pressure test equipment. Check the coolant level. Replenish as necessary with the correct coolant solution.
   REFER to: Specifications (303-03A Engine Cooling - I6 3.2L Petrol, Specifications).
8. **8.** Check the radiator overflow hose for any obstructions which may block the flow of coolant either to or from the coolant expansion tank.
9. **9.** Conduct the coolant expansion tank pressure cap pressure test in this section.

Coolant Expansion Tank Pressure Cap Pressure Test

WARNING: Never, under any circumstances, remove the coolant expansion tank pressure cap while the engine is operating. To avoid having scalding hot water or steam blow out of the cooling system, use extreme care when removing the coolant expansion tank pressure cap from a hot cooling system. Wait until the engine has cooled, then wrap a thick cloth around the coolant expansion tank pressure cap and turn it slowly until the pressure begins to release, step back while the pressure is released from the system. When certain all the pressure has been released (still with a cloth) turn and remove the coolant expansion tank pressure cap. Failure to follow these instructions may result in damage to the cooling system, engine and/or cause personal injury.

1. **1.** Remove the expansion tank pressure cap from the coolant expansion tank.
2. **2.** Use water to clean cap in area of rubber seal and vacuum relief valve. Following manufacturers instructions, install the coolant expansion tank pressure cap to the pressure tester.
3. • NOTE: If the pressure tester is pressurised too quickly, an erroneous pressure reading may result.

   3. Slowly pressurise the system until the pressure gauge reading stops increasing, and note highest pressure reading obtained.
4. **4.** Release pressure and repeat Step 3 at least twice to make sure the pressure test reading is repeatable and within specification.
5. **5.** If the pressure test gauge readings are not within specification, install a new coolant expansion tank pressure cap.

Thermostat Test

Remove the thermostat
REFER to: Thermostat (303-03B Engine Cooling - TD4 2.2L Diesel, Removal and Installation).
Inspect for visible damage, note its opening temperature and immerse it in water. Heat the water until this temperature is reached. The thermostat should begin to open. If it does not begin to open, install a new thermostat.
REFER to: Thermostat (303-03B Engine Cooling - TD4 2.2L Diesel, Removal and Installation).
If thermostat begins to open, continue to heat the water until the thermostat fully opens, 5.8 mm (0.2 in) or more off the seat. If it does not fully open, install a new thermostat.
REFER to: Thermostat (303-03B Engine Cooling - TD4 2.2L Diesel, Removal and Installation).

Radiator Leak Test - Removed from the Vehicle

CAUTION: Do not leak test an aluminium radiator in the same water that is used to leak test copper/brass radiators. Flux and caustic cleaners may be present in the test water which will corrode aluminium. If a separate tank is not available, drain and rinse the test tank before testing an aluminium radiator.

Clean the radiator before leak testing to prevent contamination of the test tank. Leak test the radiator in clean water with 138 kPa (20 psi) air pressure.

mcx30.com

Published: 11-May-2011

Engine Cooling - TD4 2.2L Diesel - Cooling System Draining, Filling and Bleeding

General Procedures

1. Position the vehicle on a lift.

2. Set the heater controls to maximum.

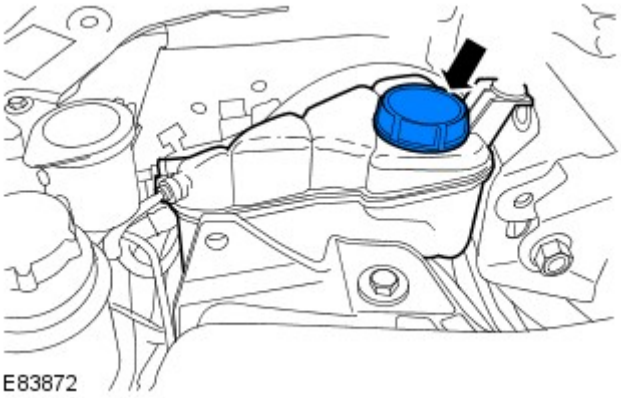

3. **3.** WARNING: Since injury such as scalding could be caused by escaping steam or coolant, do not remove the filler cap from the coolant expansion tank while the system is hot.

   Remove the coolant expansion tank cap.

4. Disconnect the battery ground cable.

   Refer to: Specifications (414-00 Battery and Charging System - General Information, Specifications).

5. Remove the RH front wheel.

   Refer to: Wheel and Tire (204-04 Wheels and Tires, Removal and Installation).

6. Remove the engine undershield.

   Refer to: Engine Undershield (501-02 Front End Body Panels, Removal and Installation).

7. Position a container to collect the fluid.

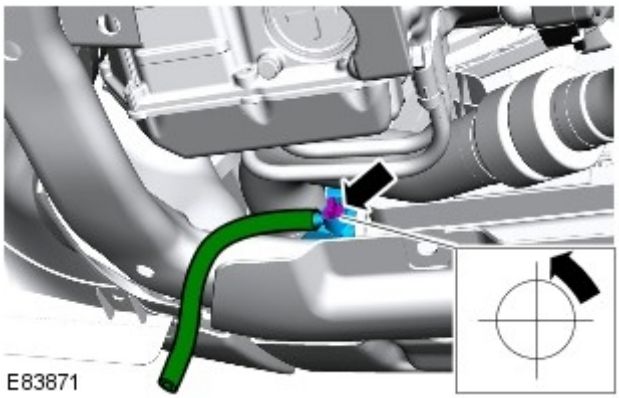

8. Attach a hose to the radiator drain tap. Open the tap.

mcx30.com

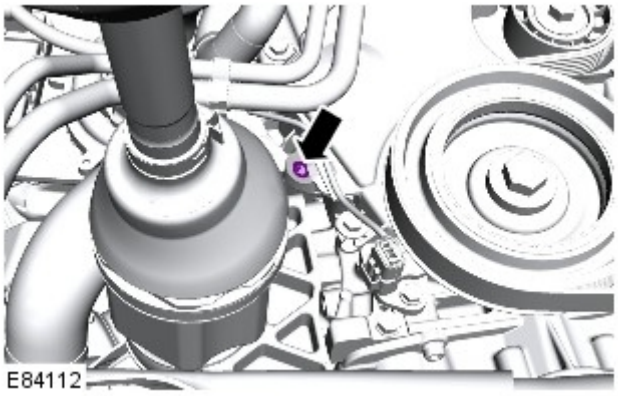

9. *Torque:* 23 Nm

10. Tighten the radiator drain tap.

11. Install the drain plug.

12. Connect the battery ground cable.

    Refer to: Specifications (414-00 Battery and Charging System - General Information, Specifications).

13. Connect exhaust extraction hoses to the tail pipes.

14. Fill the cooling system to the upper level mark of the expansion tank.

15. Install the coolant expansion tank cap.

16. Hold the engine speed at 2000 rpm until warm air is expelled from the heater.

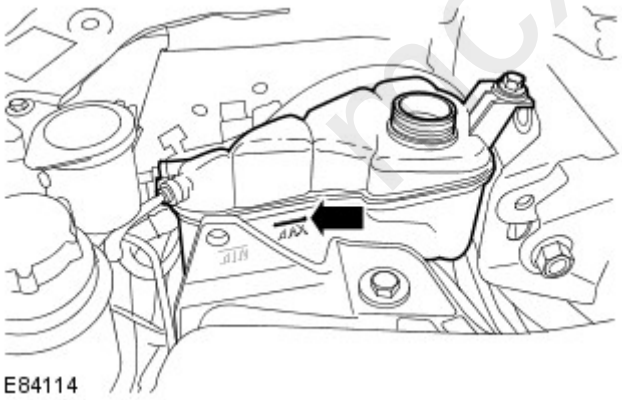

17. Fill the cooling system to the upper level mark of the expansion tank.

18. Switch the engine off and allow to cool.

19. Clean any spilt coolant from the vehicle.

20. Check and top-up the coolant if required.

21. Install the engine undershield.

    Refer to: Engine Undershield (501-02 Front End Body Panels, Removal and Installation).

mcx30.com

22. Install the front wheel.

    Refer to: Wheel and Tire (204-04 Wheels and Tires, Removal and Installation).

mcx30.com

Published: 11-May-2011

Engine Cooling - TD4 2.2L Diesel - Cooling System Draining and Vacuum Filling

General Procedures

WARNING: To avoid having scalding hot coolant or steam blowing out of the cooling system, use extreme care when removing the coolant pressure cap from a hot cooling system. Wait until the engine has cooled, then wrap a thick cloth around the coolant pressure cap and turn it slowly until the pressure begins to release. Step back while the pressure is released from the system. When certain all the pressure has been released (still with a cloth) turn and remove the coolant pressure cap from the coolant expansion tank. Failure to follow these instructions may result in personal injury.

- CAUTIONS:

The engine cooling system must be maintained with the correct concentration and type of anti-freeze solution to prevent corrosion and frost damage. Failure to follow this instruction may result in damage to the vehicle.

Engine coolant will damage the paint finished surfaces. If spilt, immediately remove the coolant and clean the area with water.

1. Set the heater controls to maximum HOT.

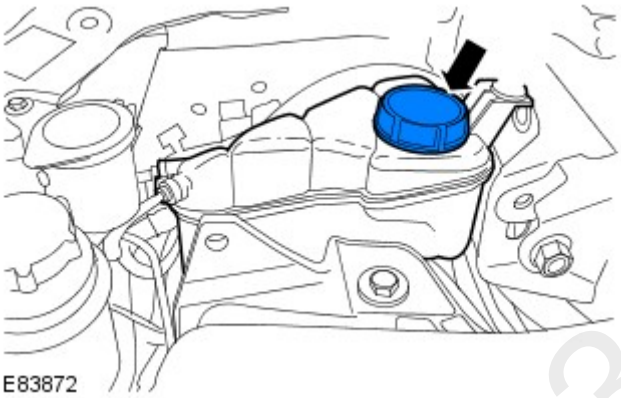

2. **2.** WARNING: Since injury such as scalding could be caused by escaping steam or coolant, do not remove the filler cap from the coolant expansion tank while the system is hot.

   Remove the coolant expansion tank cap.

3. **3.** WARNING: Do not work on or under a vehicle supported only by a jack. Always support the vehicle on safety stands.

   Raise and support the vehicle.

4. Remove the engine undershield.

   Refer to: Engine Undershield (501-02 Front End Body Panels, Removal and Installation).

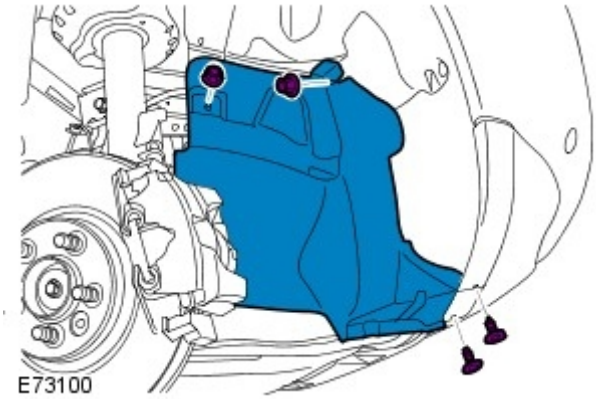

5. **5.** NOTE: Wheel shown removed for clarity.

   Remove the front RH splash shield.

6. Position a container to collect the fluid.

mcx30.com

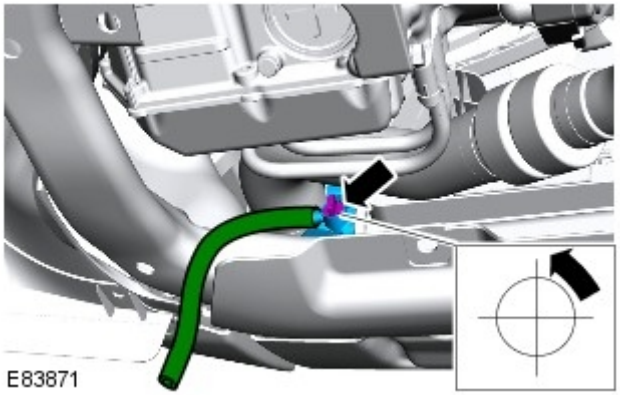

7.
- Attach a hose to the radiator drain tap.
- Open the radiator drain tap.
- Drain the coolant from the radiator.

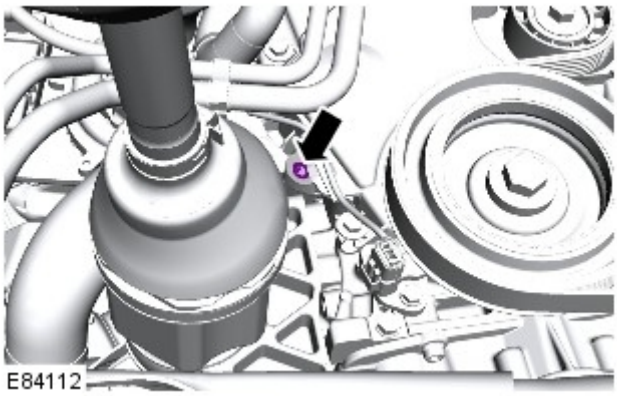

8.
- Remove the drain plug.
- Drain the coolant from the engine.

9. Close the radiator drain tap and remove the hose.

10. Install the drain plug.

    Torque: 23 Nm

11. Prepare a sufficient amount of coolant to the specified concentration.

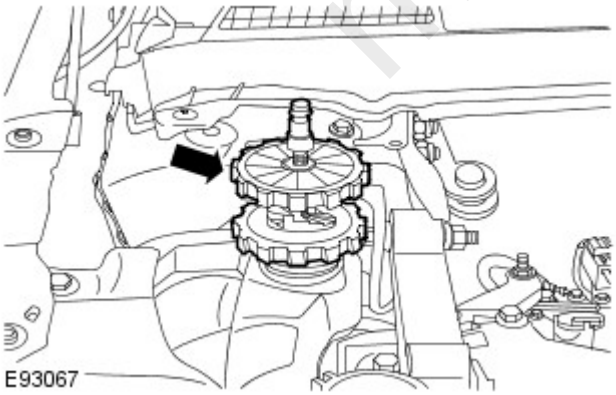

12. Install the cooling system vacuum refill adaptor to the expansion tank.

mcx30.com

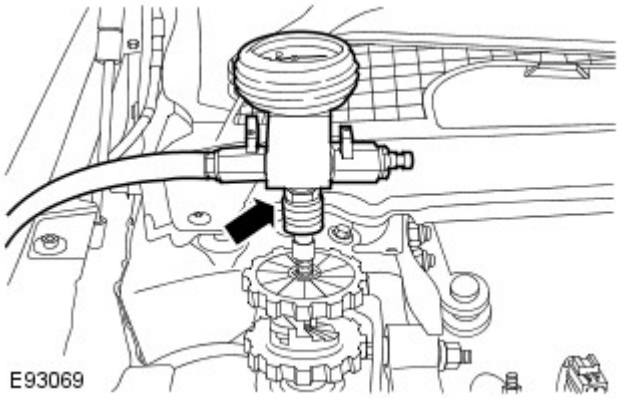

13. Install the vacuum filler gauge to the cooling system vacuum refill adaptor.

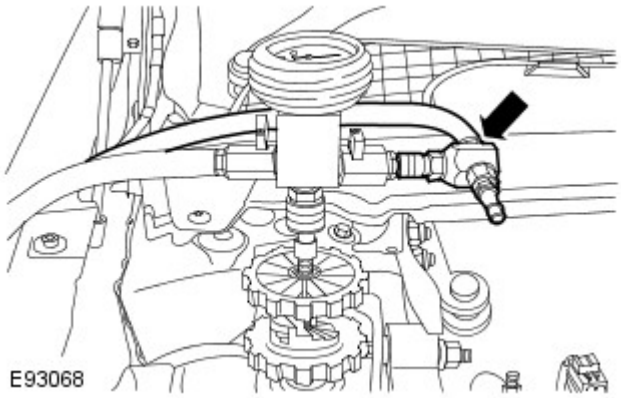

14. Install the venturi tube assembly to the vacuum filler gauge.

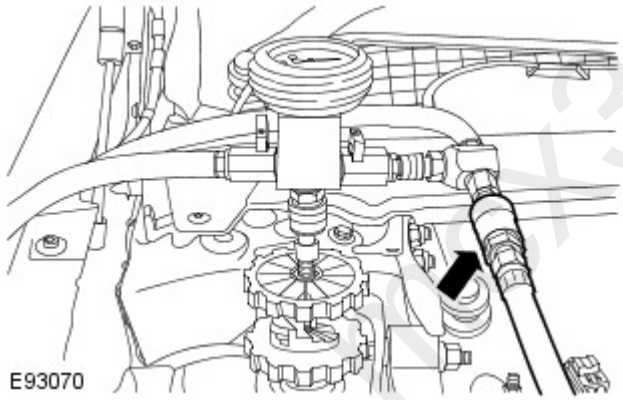

15. Connect a regulated compressed air supply to the venturi tube assembly.

16. **16.** NOTE: Make sure air cannot enter the hose.

    Position the coolant pick-up pipe into a container of clean coolant.

17. Position the evacuated air hose into a container.

mex30.com

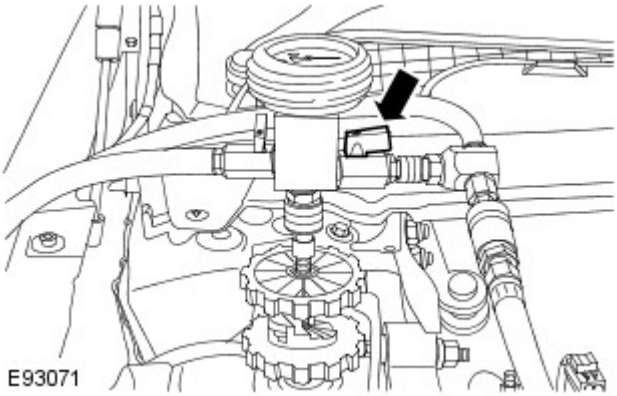

18. **18.** NOTE: Make sure the coolant supply valve is in the closed position on the vacuum filler gauge assembly.

    • NOTE: The coolant vacuum fill tool needs an air pressure of 6 to 8 bar (87 to 116 psi) to operate correctly.

    • NOTE: Small diameter or long airlines may restrict airflow to the coolant vacuum fill tool.

    Open the air supply valve.

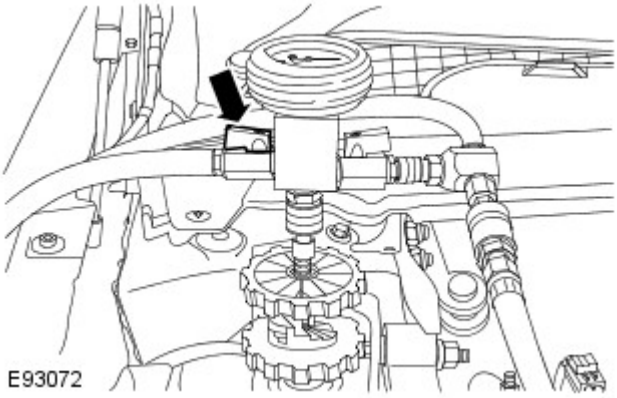

19. Open the coolant supply valve for 2 seconds to prime the coolant supply hose.

20. Apply air pressure progressively until the arrow on the vacuum filler gauge reaches the green segment.

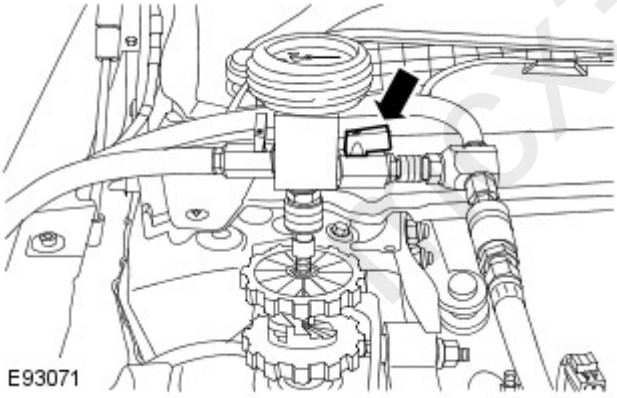

21. Close the air supply valve.

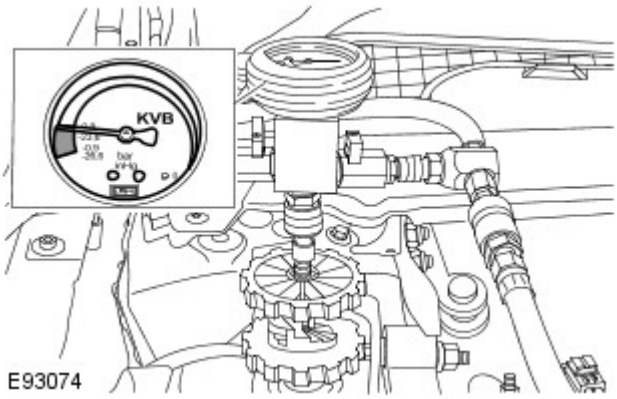

22.
    - Allow 1 minute to check the vacuum is held.
    - Disconnect the compressed air supply.

cx30.com

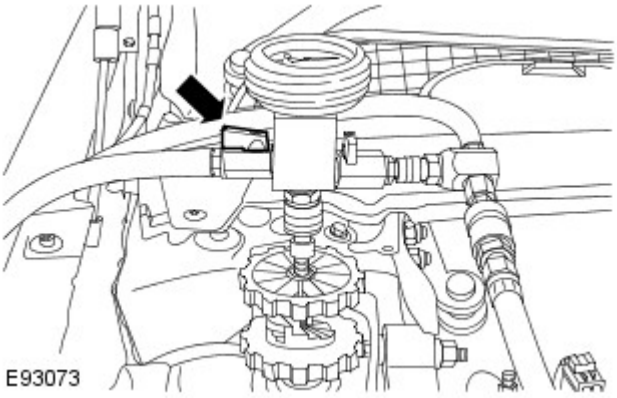

23. **23.** NOTE: Close the coolant supply valve when the coolant expansion tank MAX mark is reached or coolant movement has ceased.

    Open the coolant supply valve and allow the coolant to be drawn into the system.

24. Remove the vacuum filler gauge and cooling system vacuum refill adaptor assembly.

25. Connect exhaust extraction hoses to the tail pipes.

26. Start and run the engine.

27. Install the coolant expansion tank cap.

28. Hold the engine speed at 2000 rpm until warm air is expelled from the heater.

29. Switch the engine off and allow to cool.

30. Clean any spilt coolant from the vehicle.

31. **31.** WARNING: Since injury such as scalding could be caused by escaping steam or coolant, allow the vehicle cooling system to cool prior to carrying out this procedure.

    Check and top-up the coolant if required.

32. Install the front RH splash shield.

33. Install the engine undershield.

    Refer to: Engine Undershield (501-02 Front End Body Panels, Removal and Installation).

mcx30.com

Published: 11-May-2011

Engine Cooling - TD4 2.2L Diesel - Thermostat

Removal and Installation

Removal

1. Disconnect the battery ground cable.

   Refer to: Specifications (414-00 Battery and Charging System - General Information, Specifications).

2. Remove the engine cover.

   Refer to: Engine Cover - TD4 2.2L Diesel (501-05 Interior Trim and Ornamentation, Removal and Installation).

3. **3.** WARNING: Do not work on or under a vehicle supported only by a jack. Always support the vehicle on safety stands.

   Raise and support the vehicle.

4. Drain the cooling system.

   Refer to: Cooling System Draining, Filling and Bleeding (303-03B Engine Cooling - TD4 2.2L Diesel, General Procedures).

5. Remove the air cleaner assembly.

   Refer to: Air Cleaner (303-12A Intake Air Distribution and Filtering - I6 3.2L Petrol, Removal and Installation).

6.

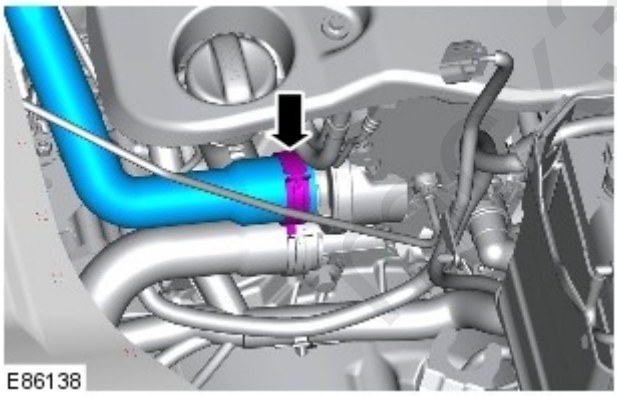

7.

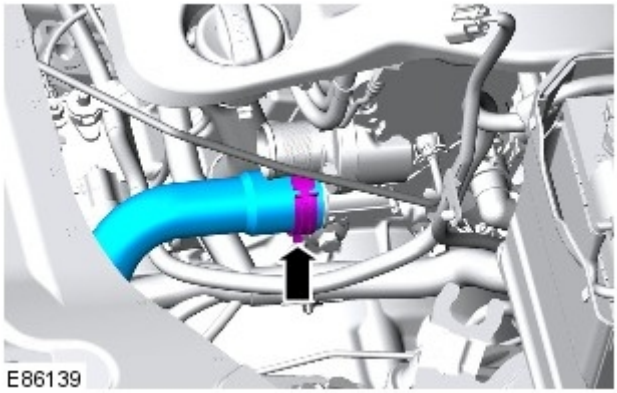

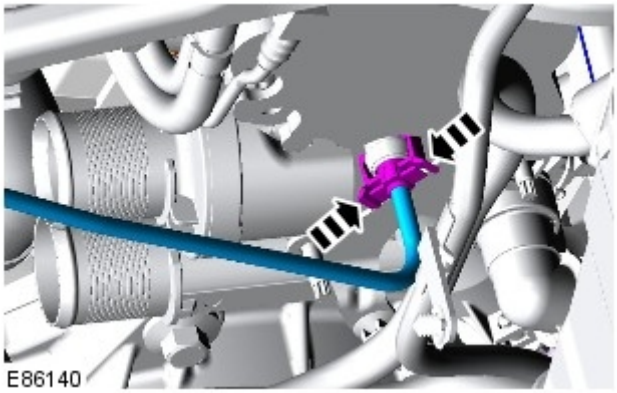

8.

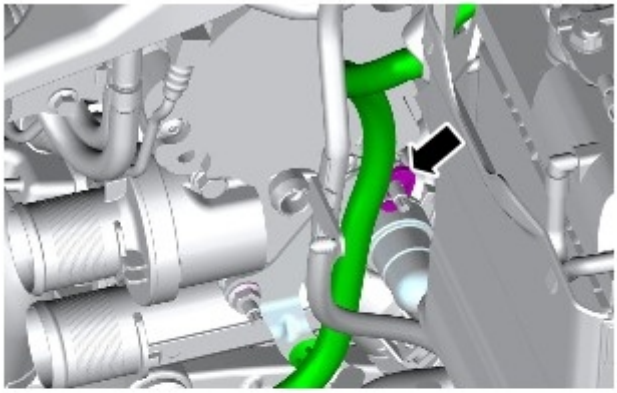

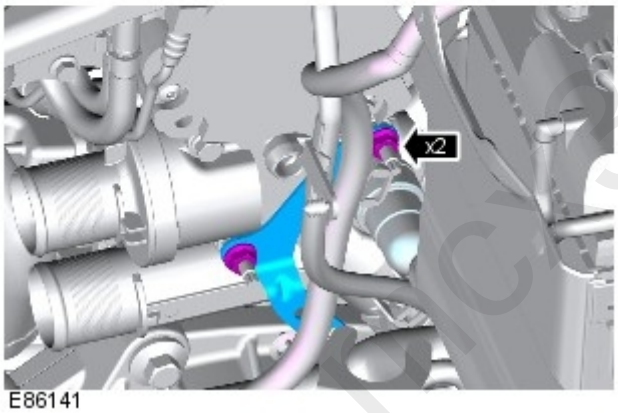

9.

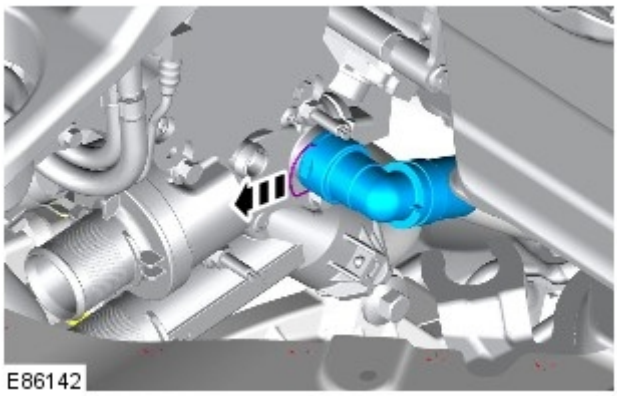

10. **10.** CAUTIONS:

The O-ring seal is to be reused unless damaged.

Be prepared to collect escaping coolant.

11.

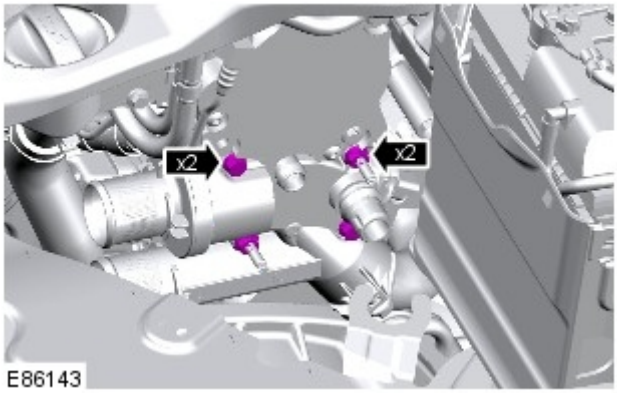

12.

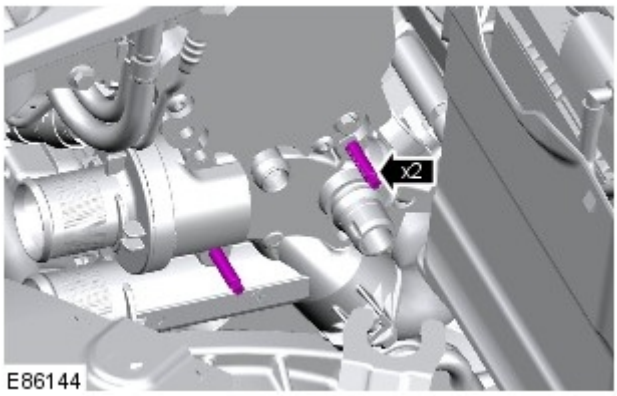

13.

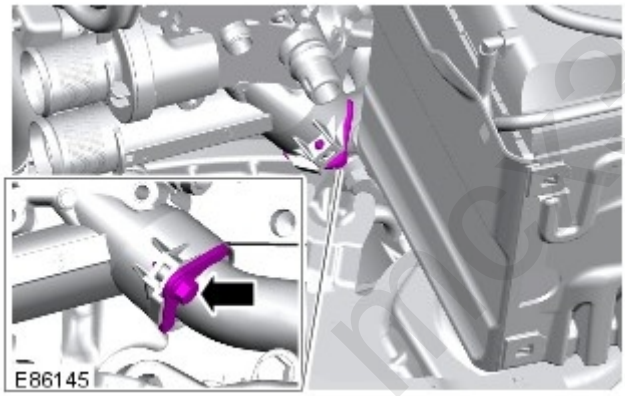

mgso.com

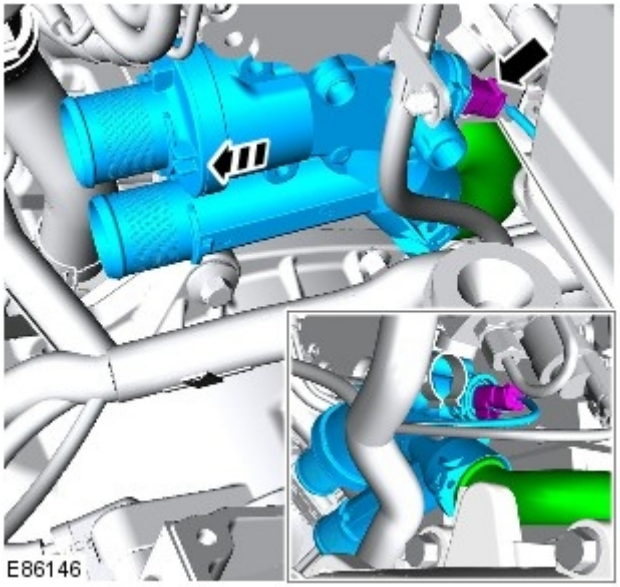

14.

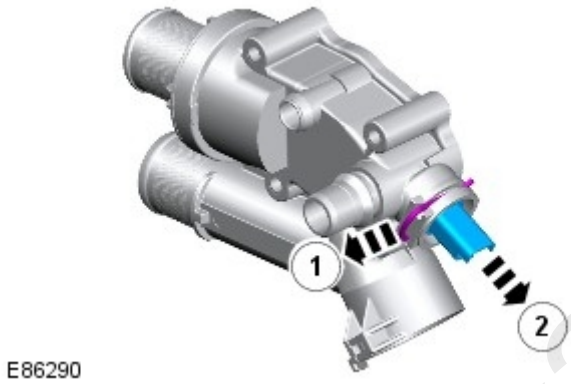

15. **15.** NOTE: Remove and discard the O-ring seal.

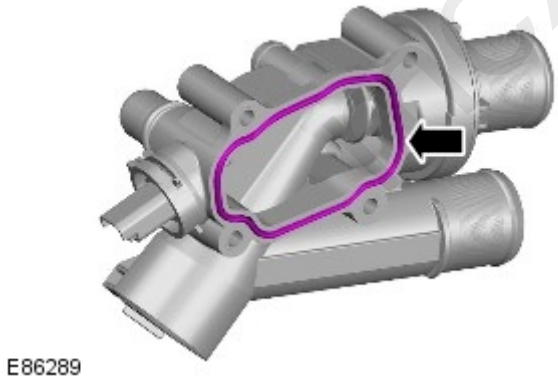

16. **16.** NOTE: Discard the gasket.

Installation

1. Install the engine coolant temperature (ECT) sensor.

2. **2.** CAUTIONS:

   Make sure that the gaskets are correctly located.

   Make sure that the mating faces are clean and free of foreign material.

   • NOTE: Install a new gasket.

fcx30.com

- Install the thermostat housing.
- Connect the engine coolant tempreture (ECT) sensor electrical connector.

3. Secure the coolant manifold to thermostat housing pipe.

   Torque: 8 Nm

4. Install the studs.

   Torque: 7 Nm

5. Secure the thermostat housing.

   Torque: 8 Nm

6. Connect the heater outlet pipe.

7. Secure the wiring harness support bracket.

   Torque: 8 Nm

8. Connect the coolant hoses to the thermostat housing.

9. Install the engine cover.

   Refer to: Engine Cover - TD4 2.2L Diesel (501-05 Interior Trim and Ornamentation, Removal and Installation).

10. Install the air cleaner assembly.

    Refer to: Air Cleaner (303-12A Intake Air Distribution and Filtering - I6 3.2L Petrol, Removal and Installation).

11. Connect the battery ground cable.

    Refer to: Specifications (414-00 Battery and Charging System - General Information, Specifications).

12. Refill and bleed the cooling system.

    Refer to: Cooling System Draining, Filling and Bleeding (303-03B Engine Cooling - TD4 2.2L Diesel, General Procedures).

mcx30.com

Published: 11-May-2011

Engine Cooling - TD4 2.2L Diesel - Coolant Pump

Removal and Installation

Removal

CAUTION: The crankshaft or camshafts must not be rotated while the timing belt is removed.

• NOTE: Removal steps in this procedure may contain installation details.

1. Remove the cover and disconnect the battery ground cable.

   Refer to: Specifications (414-00 Battery and Charging System - General Information, Specifications).

2. **2.** WARNING: Make sure to support the vehicle with axle stands.

   Raise and support the vehicle.

3. Drain the coolant.

   Refer to: Cooling System Draining, Filling and Bleeding (303-03B Engine Cooling - TD4 2.2L Diesel, General Procedures).

4. Remove and discard the timing belt.

   Refer to: Timing Belt (303-01B Engine - TD4 2.2L Diesel, Removal and Installation).

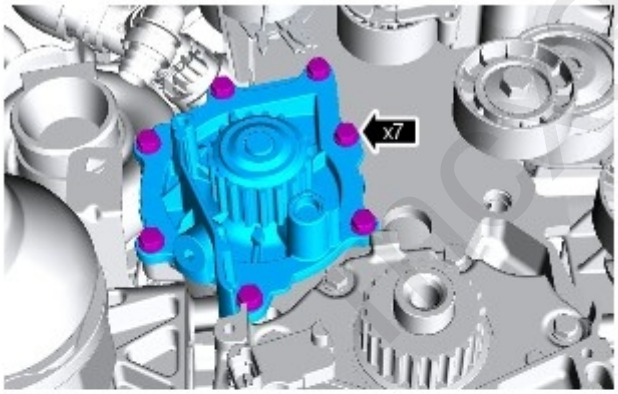

E85145

5. **5.** CAUTION: Note the fitted position of the component prior to removal.

   • NOTE: Make sure that the component is clean, free of foreign material and lubricant.

   • NOTE: Install a new gasket.

   - *Torque:* 17 Nm

Installation

1. To install, reverse the removal procedure.

Published: 11-May-2011

Engine Cooling - TD4 2.2L Diesel - Radiator

Removal and Installation

Removal

All vehicles

1. **1.** WARNING: Make sure to support the vehicle with axle stands.

   Raise and support the vehicle.

2. Remove the cooling fan motor and shroud.

   Refer to: Cooling Fan (303-03B Engine Cooling - TD4 2.2L Diesel, Removal and Installation).

3. Remove the bumper armature.

   Refer to: Front Bumper (501-19 Bumpers, Removal and Installation).

4. Remove the charge air cooler.

   Refer to: Charge Air Cooler (303-12B Intake Air Distribution and Filtering - TD4 2.2L Diesel, Removal and Installation).

5.

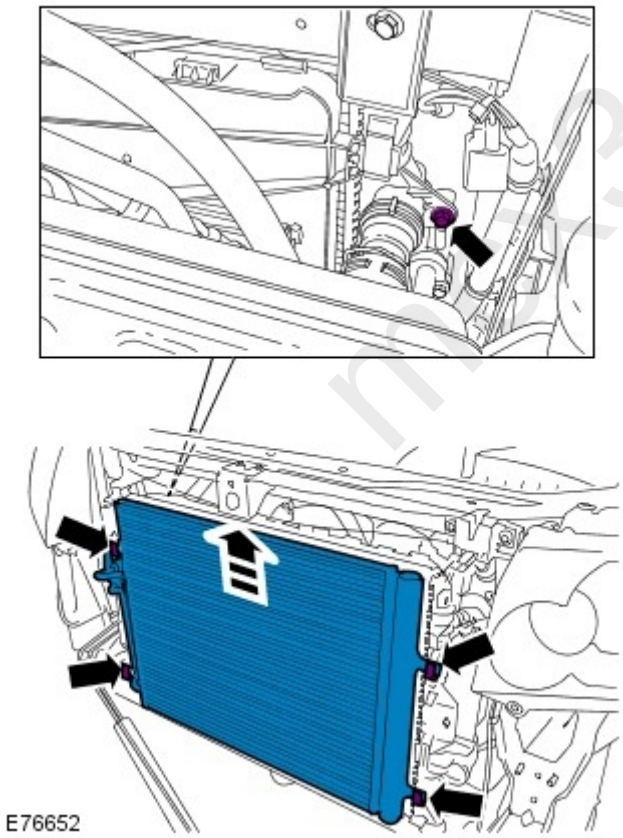

mk30.com

6.

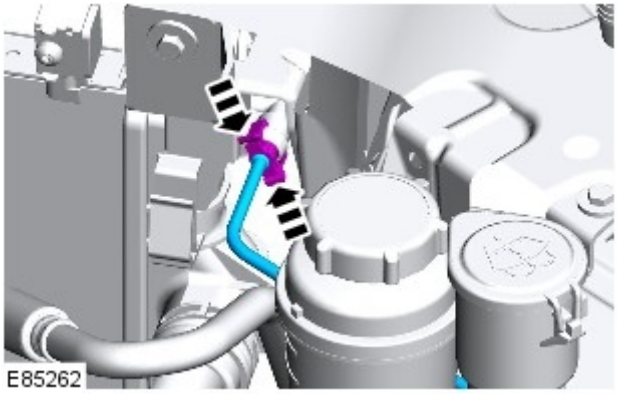

Vehicles with automatic transmission

7.

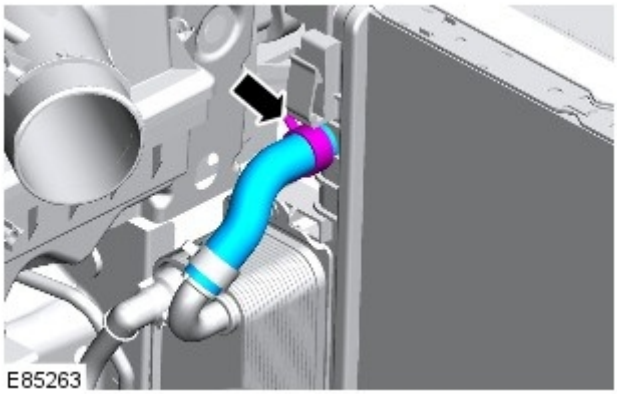

8.

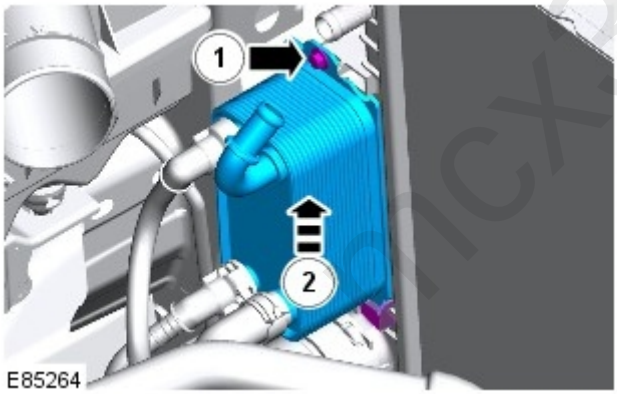

All vehicles

9.

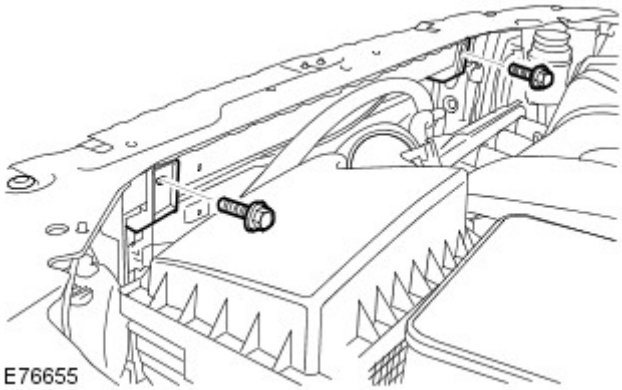

micx30.com

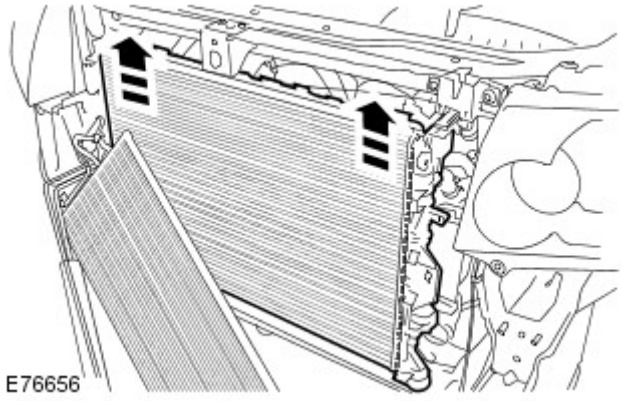

10.

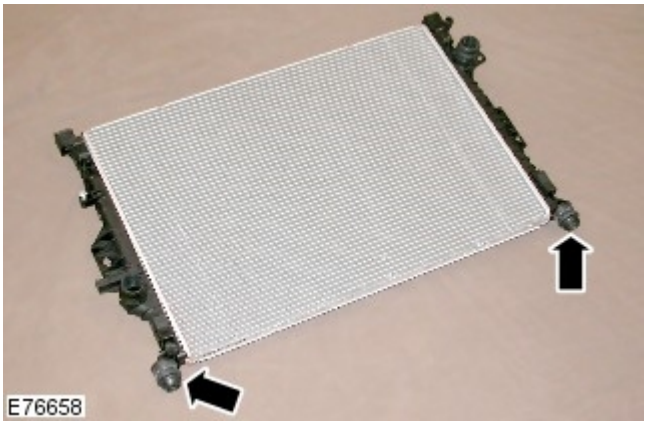

11.

Installation

All vehicles

1. Install the rubber mounts.
2. Carefully install the radiator.
3. Install the mountings and tighten the bolts.

   Torque: 6 Nm

Vehicles with automatic transmission

4. Install the automatic transmission fluid cooler.

   Torque: 6 Nm

5. Connect and secure the coolant hose.

All vehicles

6. Connect the coolant expansion tank hose to the radiator.
7. Attach the A/C condenser to the radiator.

   Torque: 10 Nm

8. Install the charge air cooler.

   Refer to: Charge Air Cooler (303-12B Intake Air Distribution and

mcx30.com

Filtering - TD4 2.2L Diesel, Removal and Installation).

9. Install the bumper armature.

   Refer to: Front Bumper (501-19 Bumpers, Removal and Installation).

10. Install the cooling fan motor and shroud.

    Refer to: Cooling Fan (303-03B Engine Cooling - TD4 2.2L Diesel, Removal and Installation).

mcx30.com

Published: 11-May-2011

Engine Cooling - TD4 2.2L Diesel - Cooling Fan

Removal and Installation

Removal

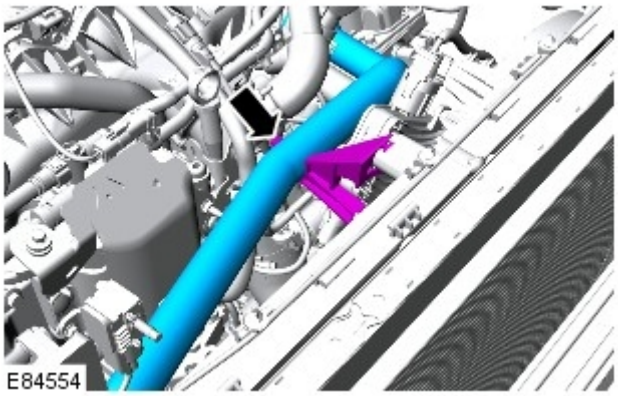

1.

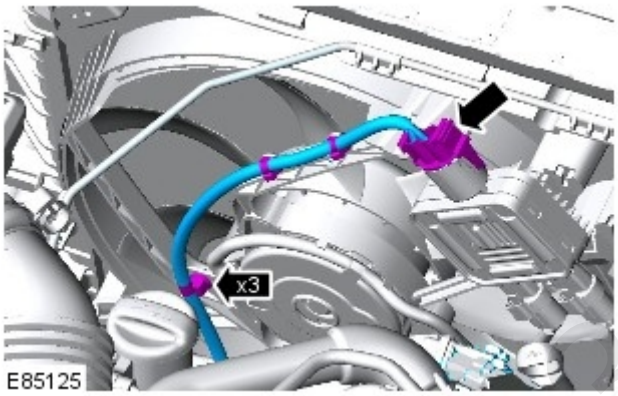

2.

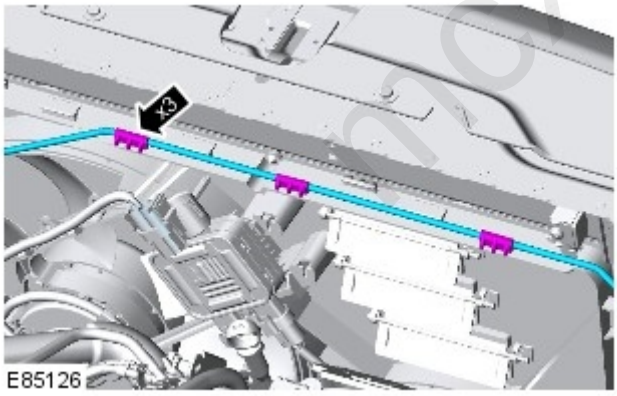

3.

mqx30.com

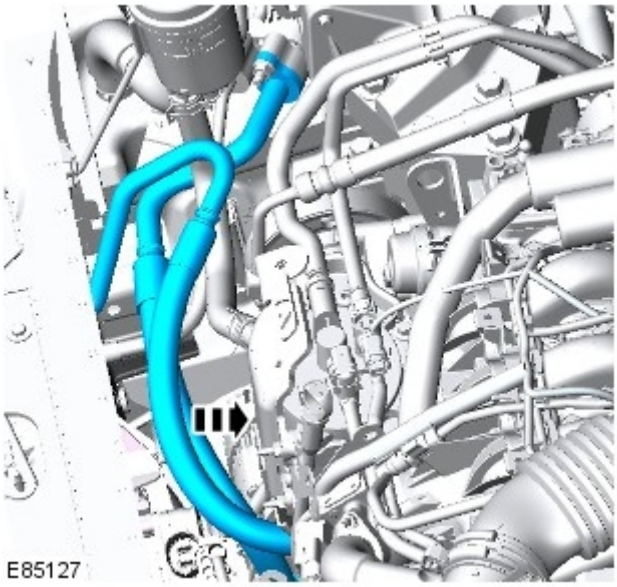

4.
- Tie the Air Conditioning (A/C) pipes aside.

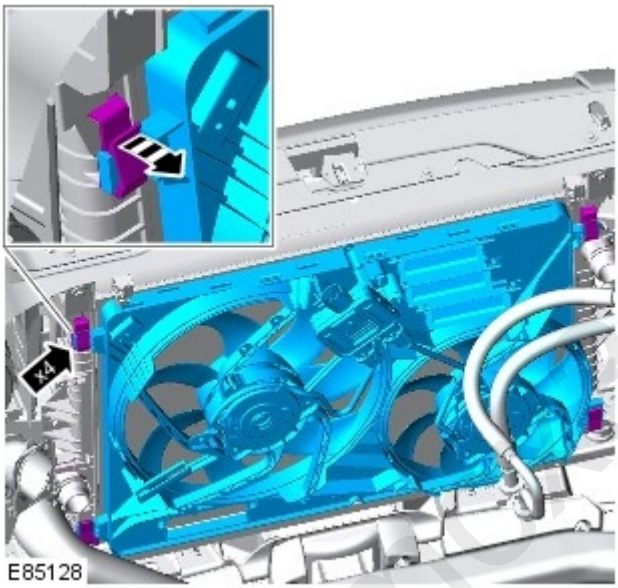

5. **5.** CAUTION: Note the routing of the lines and hoses.

Installation

1. To install, reverse the removal procedure.

Published: 11-May-2011

Engine Cooling - TD4 2.2L Diesel - Cooling Fan Module

Removal and Installation

Removal

• NOTE: Petrol illustration shown, diesel similar.

1. Remove the cover and disconnect the battery ground cable.

   Refer to: Specifications (414-00 Battery and Charging System - General Information, Specifications).

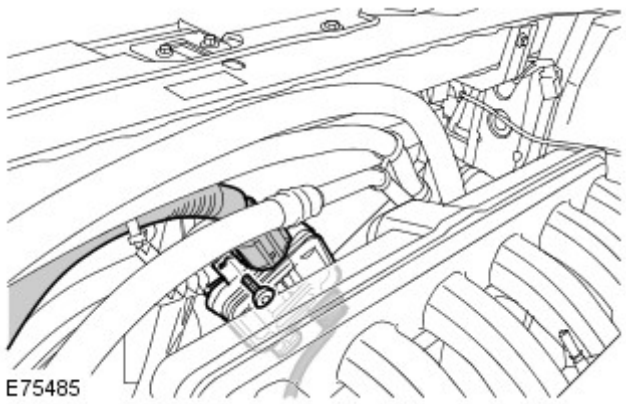

2.
   - Remove the cooling fan module.
   - *Torque:* 6 Nm

Installation

1. To install, reverse the removal procedure.

mcx30.com

Published: 11-May-2011

Engine Cooling - TD4 2.2L Diesel - Coolant Expansion Tank

Removal and Installation

Removal

WARNING: When releasing the cooling system pressure, cover the coolant expansion tank cap with a thick cloth.

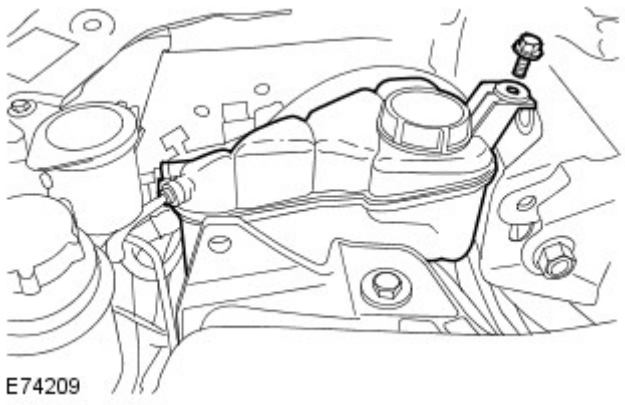

1. *Torque:* 10 Nm

2. Clamp the relevant hose, to minimise coolant loss.

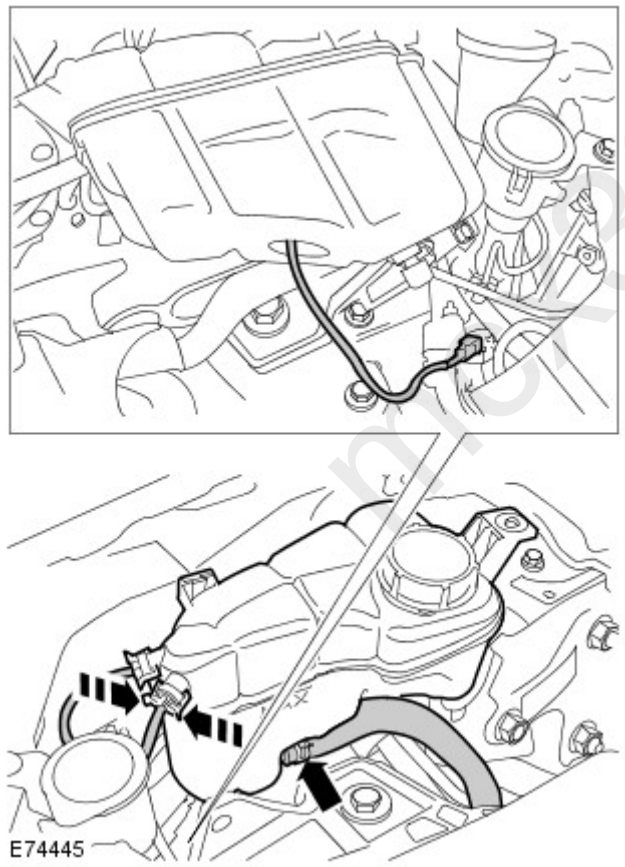

3. **3.** CAUTION: Be prepared to collect escaping coolant.

4. **4.** NOTE: Do not disassemble further if the component is removed for access only.

Installation

1. To install, reverse the removal procedure.

2. Top-up the coolant.

mcx30.com

Published: 11-May-2011

Engine Cooling - TD4 2.2L Diesel - Engine Coolant Level Switch

Removal and Installation

Removal

- NOTE: Removal steps in this procedure may contain installation details.

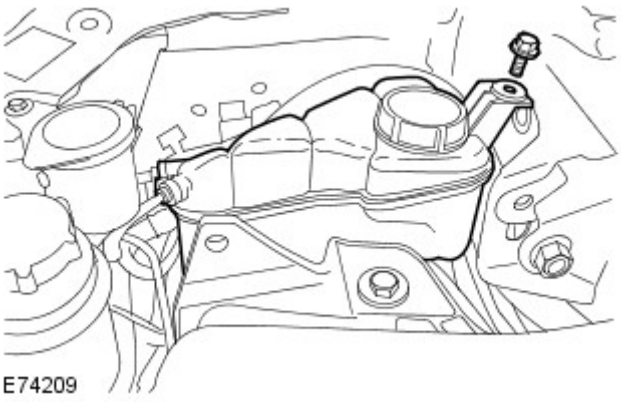

1. *Torque:* 10 Nm

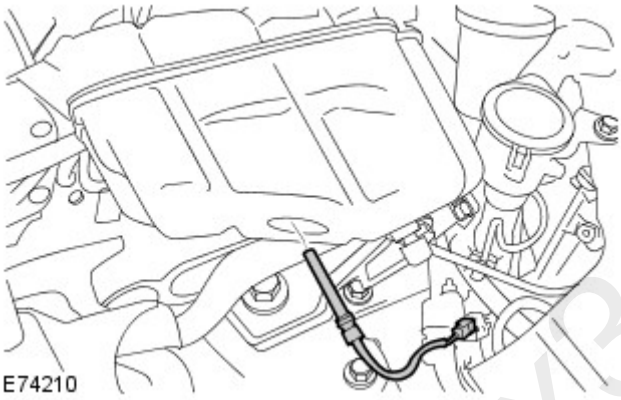

2.

Installation

1. To install, reverse the removal procedure.

mcx30.com